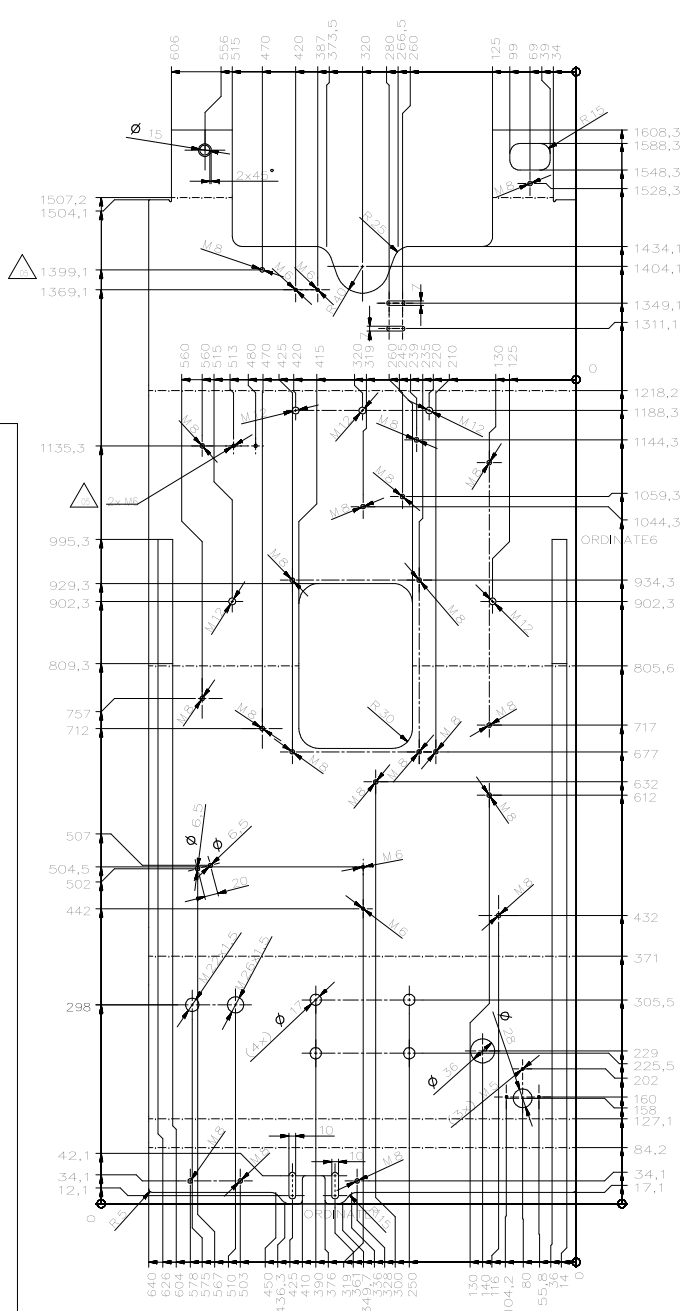

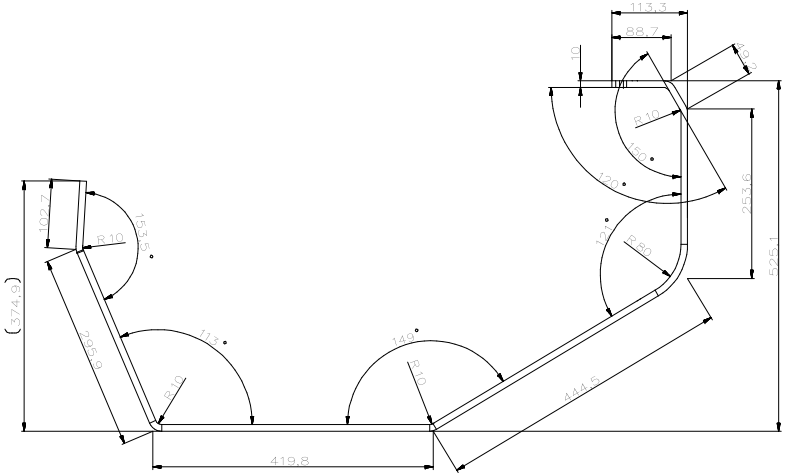

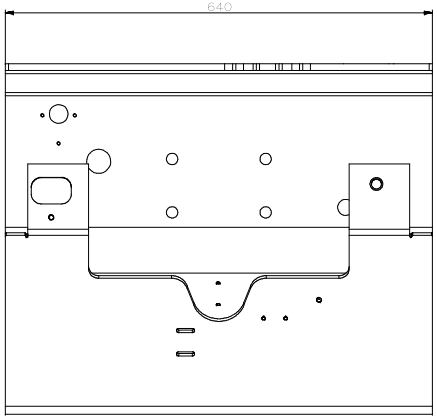

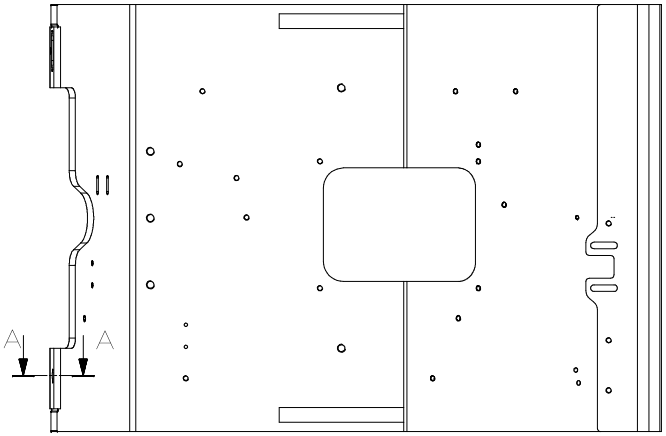

SECTION A–A

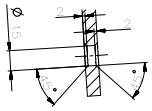

Ⓒ - SKUTEČNÝ TVAR VÝPALKU

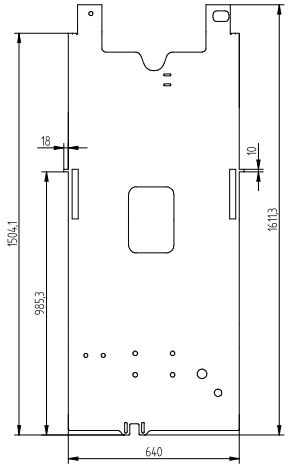

Ⓒ ZM/22/00035
DOPLNĚN POHLED SKUTEČNÉHO TVARU VÝPALKU
23.2.2022 KAHÁNEK

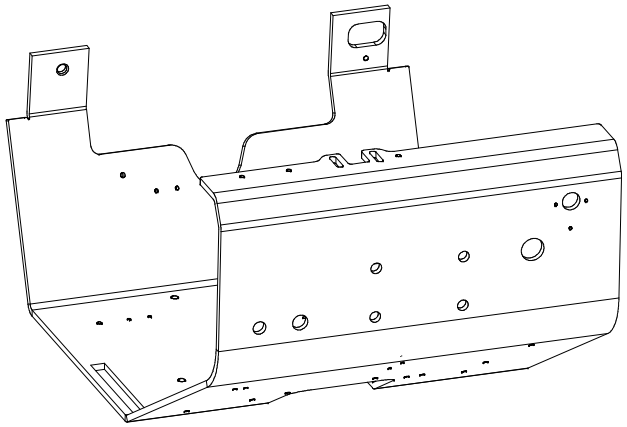

Zur vollständigen Spezifikation ist der CAD Datensatz zu verwenden
Die Material-, Dokumentennummer und Version sind dem Schriftkopf zu entnehmen
For fully specification use the CAD dataset.
The material number / document number and version is defined in the header

Ra 12,5

APPROVED FOR (F4) free for series

Welding Construction according to "WN 43"
Surface Treatment according to "WN 40"
Tower Weight according to "WN50 - 2003"
Material according to "WN 41"

Tolerance Class: DIN 1680		Name	Date	Material: BS10	DIN ISO 7000:2004-12 / SEE ISO 7000:2004-12
Scale: 1 : 4	Scale: A1	Created: LNZHELDB	18Apr2023	Surface Treatment:	Revision:
Approved:		Approved: LNZSCHMIG	18Apr2023	Standard Code:	Tower Weight [kg]: 8.9.2

Name: Motorwanne

Sheet 1 of 2

Mat.-No.: Doc.-No.: 2000383292 Version: 05